GIS GCH-1600/GCH-2000/GCH-2500

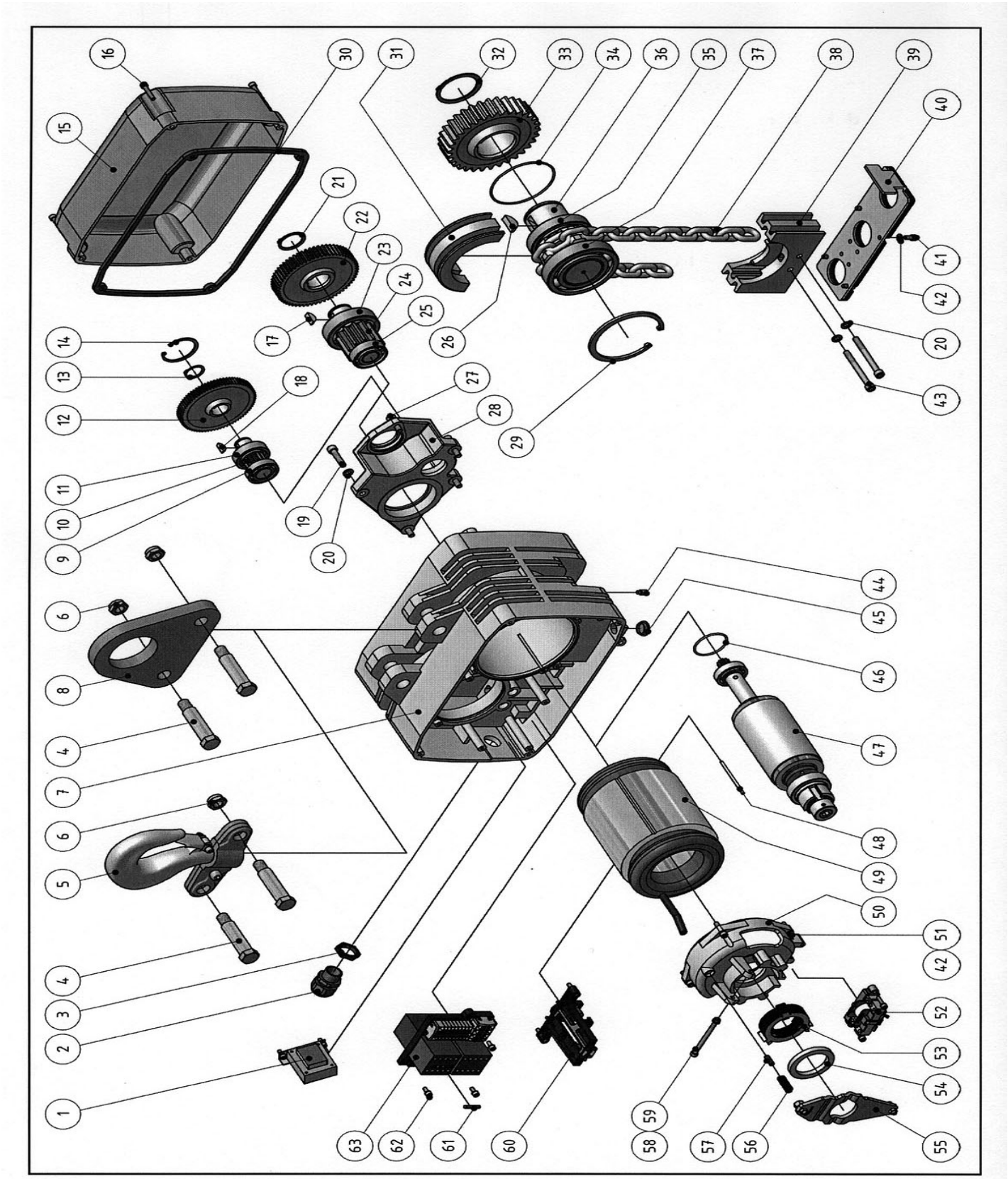

		GCH 1600	GCH 2000	GCH 2500
1	230/42V 50/60Hz	9056.4500.4	9056.4500.4	9056.4500.4
	400/42V 50/60Hz	9056.4501.4	9056.4501.4	9056.4501.4
2	M25 x 1.5	9055.3103	9055.3103	9055.3103
3	M25 x 1.5	9055.4013	9055.4013	9055.4013
4	M16 x 90	9408.3015.4	9408.3015.4	9408.3015.4
5	166 x 210	9408.3042.3	9408.3042.3	9408.3042.3
6	M16	9031.1281	9031.1281	9031.1281
7	345 x 304.5 x 251.5	9408.3000.0	9408.3000.0	9408.3000.0
8	186 x 169.94 x 20	9408.3019.3	9408.3019.3	9408.3019.3
9	6005, 25/47 x 12	0038.1036	0038.1036	0038.1036
10	ø33.67 x 74 z=13	9408.3025.4	9408.3025.4	9408.3025.4
11	6205, 25/52 x 15	9038.0019	9038.0019	9038.0019
12	ø115.92 z=78, -N/-NF	9408.3023.3	9408.3023.3	9408.3023.3
	ø109.5 z=73, -SF	9408.3024.3	9408.3024.3	9408.3024.3
13	A 25 x 1.2	0031.1016	0031.1016	0031.1016
14	I 52 x 2	9031.2206	9031.2206	9031.2206
15	345 x 230 x 96	9408.3001.2	9408.3001.2	9408.3001.2
16	M6 x 35	9030.0278	9030.0278	9030.0278
	M6 x 35	9030.3261	9030.3261	9030.3261
17	8 x 9 x 21.63	9036.0601	9036.0601	9036.0601
18	6 x 7.5 x 18.75	9036.0600	9036.0600	9036.0600
19	M8 x 35	9030.0289	9030.0289	9030.0289
20	M8	9031.3904	9031.3904	9031.3904
21	A 35 x 1.5	0031.1020	0031.1020	0031.1020
22	ø125.42 z=57	9408.3026.3	9408.3026.3	9408.3026.3
23	6307, 35/80 x 21	9038.0022	9038.0022	9038.0022
24	ø58.81 x 108 z=12	9408.3027.4	9408.3027.4	
	ø51.2 x 108 z=10			9408.3028.4
25	NJ205, 25/52 x 15	0038.1824	0038.1824	0038.1824
26	10 x 13 x 31.43	9036.0603	9036.0603	9036.0603
27	M8 x 25	9030.0287	9030.0287	9030.0287
28	213 x 164 x 62.5	9408.3002.1	9408.3002.1	9408.3002.1
29	I 110 x 4	0031.1137	0031.1137	0031.1137
30	347 x 232 x 6	9408.3003.3	9408.3003.3	9408.3003.3
31	140 x 70 x 49	9408.3011.3		
	140 x 70 x 49		9408.3013.3	9408.3013.3
32	A 60 x 2	0031.1028	0031.1028	0031.1028
33	ø143.86 z=34	9408.3029.3	9408.3029.3	
	ø151.47 z=36			9408.3030.3
34	ø95 x 2.5	9035.0017	9035.0017	9035.0017
35	6012 2RS, 60/95 x 18	0038.1085	0038.1085	0038.1085
36	ø97 x 140, 5T	9408.3031.2		
	ø101 x 140, 5T		9408.3032.2	9408.3032.2
37	6212 2Z, 60/110 x 22	9038.0020	9038.0020	9038.0020
38	9 x 27	9039.0010		

		GCH 1600	GCH 2000	GCH 2500
38	10 x 28		9039.0011	9039.0011
39	140 x 85 x 49	9408.3012.3		
	140 x 85 x 49		9408.3014.3	9408.3014.3
40	83/13 x 250	9408.3016.3	9408.3016.3	9408.3016.3
41	M6 x 12	9030.0274	9030.0274	9030.0274
42	M6	9031.3903	9031.3903	9031.3903
43	M8 x 80	9030.0309	9030.0309	9030.0309
44	M6 x 16	9030.2502	9030.2502	9030.2502
45	M20 x 1.5	9055.3512	9055.3512	9055.3512
46	ø47 x 2.5	9035.0015	9035.0015	9035.0015
47	1-t ø80 x 90 z=10, -N	9408.3033.3	9408.3033.3	9408.3033.3
	2-t ø80 x 130 z=10, -NF	9408.3034.3	9408.3034.3	9408.3034.3
	2-t ø80 x 130 z=15, -SF	9408.3035.3	9408.3035.3	9408.3035.3
48	ø4 x 75	9230.3097.4	9230.3097.4	9230.3097.4
49	L=90, 3Ph 230/400V 50Hz, 2p, -N	9407.0100.3	9407.0100.3	9407.0100.3
	L=130, 3Ph 400V 50Hz, 8/2p, -NF/-SF	9407.0400.3	9407.0400.3	9407.0400.3
	L=130, 3Ph 230V 50Hz, 8/2p, -NF/-SF	9407.0402.3	9407.0402.3	9407.0402.3
50	ø156 x 93.5	9405.3005.2	9405.3005.2	9405.3005.2
51	M6 x 25	9030.0276	9030.0276	9030.0276
52	230V 50/60Hz, kompl.	9056.2201.4	9056.2201.4	9056.2201.4
	400V 50/60Hz, kompl.	9056.2200.4	9056.2200.4	9056.2200.4
53	ø80 x 22	9408.3039.4	9408.3039.4	9408.3039.4
54	ø68/51 x 6	9408.3055.4	9408.3055.4	9408.3055.4
55	168 x 65 x 9	9405.3014.3	9405.3014.3	9405.3014.3
56	ø9.4/1.6 x 30	9400.3042.4	9400.3042.4	9400.3042.4
57	ø6.8 x 21	9210.3345.4	9210.3345.4	9210.3345.4
58	M6 x 80	9030.0284	9030.0284	9030.0284
59	M6	9031.1276	9031.1276	9031.1276
60	119 x 103.5, kompl.	9401.3015.3	9401.3015.3	9401.3015.3
	119 x 103.5, NA kompl.	9401.3018.3	9401.3018.3	9401.3018.3
61	1.6A	9052.0012	9052.0012	9052.0012
62	M5 x 16	9030.3260	9030.3260	9030.3260
63	1-t NA 42V	9402.1200.2	9402.1200.2	9402.1200.2
	2-t NA 42V	9402.1300.2	9402.1300.2	9402.1300.2

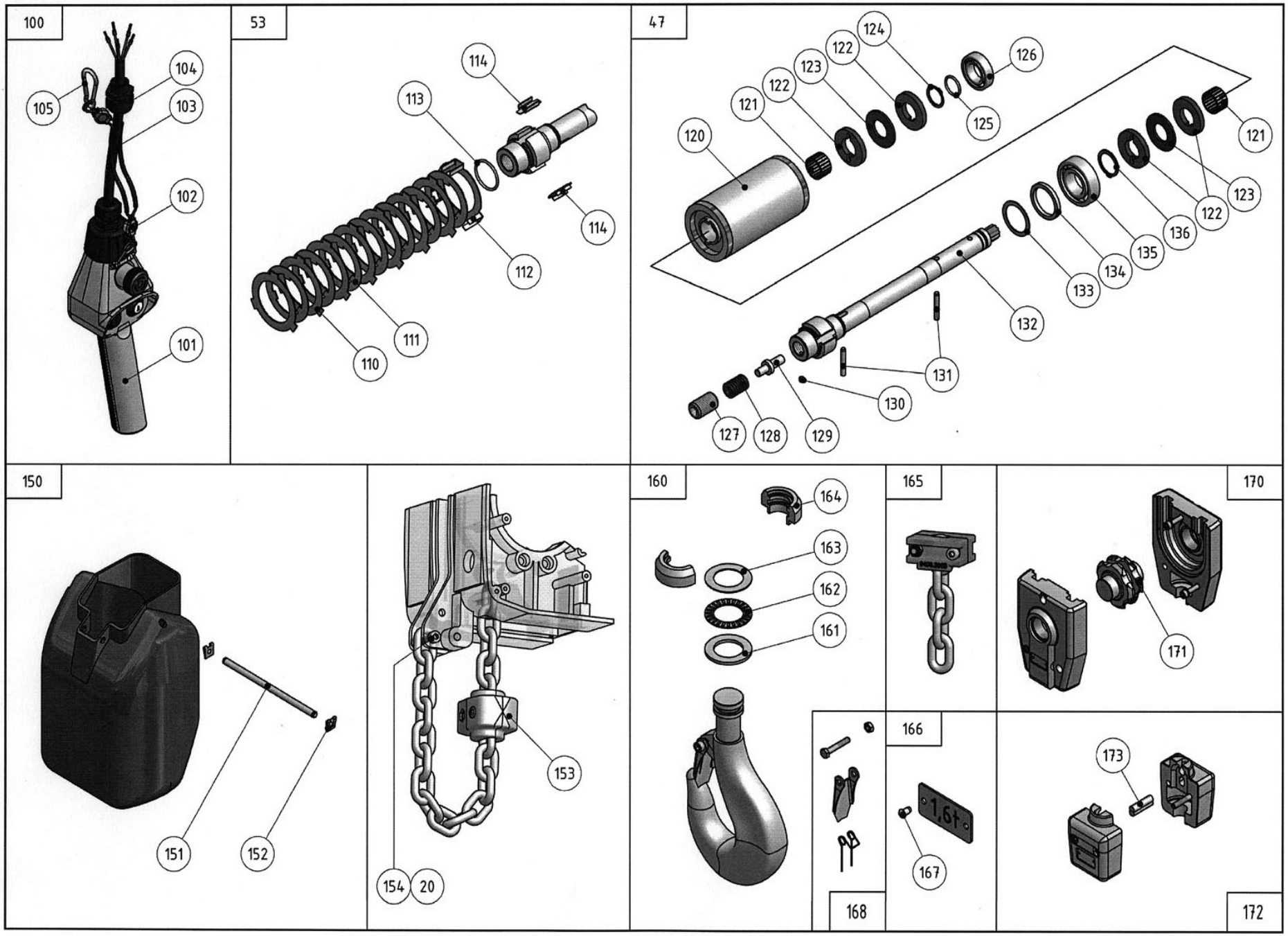
100
101
102
103
104
105
53
110
111
112
113
114
114
47
120
121
122
123
124
125
126
121
122
123
122
136
135
134
133
132
131
130
129
128
127
150
151
152
20
153
154
160
161
162
163
164
165
170
171
168
166
1,6t
167
172
173

		GCH 1600	GCH 2000	GCH 2500
100	2K NA 3 m	9290.1086.3	9290.1086.3	9290.1086.3
	2K NA 4 m	9290.1087.3	9290.1087.3	9290.1087.3
	2K NA 5 m	9290.1088.3	9290.1088.3	9290.1088.3
	2K NA 6 m	9290.1089.3	9290.1089.3	9290.1089.3
	2K NA 8 m	9290.1090.3	9290.1090.3	9290.1090.3
	2K NA 10 m	9290.1091.3	9290.1091.3	9290.1091.3
	2K NA 12 m	9290.1092.3	9290.1092.3	9290.1092.3
	2K NA 15 m	9290.1093.3	9290.1093.3	9290.1093.3
	2K NA 20 m	9290.1094.3	9290.1094.3	9290.1094.3
101	2K NA	9290.1084.3	9290.1084.3	9290.1084.3
102	1.3 x 2.6 x 5	9039.1104	9039.1104	9039.1104
103	5 x 0.75 mm², L=	9055.0110	9055.0110	9055.0110
104	M20 x 1.5	9055.3102	9055.3102	9055.3102
105	L=50	9031.8004	9031.8004	9031.8004
110	ø78/50 x 1	9221.3299.4	9221.3299.4	9221.3299.4
111	ø67/48.5 x 1	9221.3300.4	9221.3300.4	9221.3300.4
112	ø80 x 22	9405.3018.4	9405.3018.4	9405.3018.4
113	ø32 x 2.5	9035.0021	9035.0021	9035.0021
114	33 x 11.8 x 5.8	9405.3017.4	9405.3017.4	9405.3017.4
120	1-t ø80 x 90, -N	9405.3035.3	9405.3035.3	9405.3035.3
	2-t ø80 x 130, -NF/-SF	9405.3037.3	9405.3037.3	9405.3037.3
121	25/29 x 17	9038.0261	9038.0261	9038.0261
122	ø50 x 6.5	9405.3021.4	9405.3021.4	9405.3021.4
123	ø50 x 3	9405.3013.4	9405.3013.4	9405.3013.4
124	A 25 x 1.2	0031.1016	0031.1016	0031.1016
125	ø19.5 x 2.5	9035.0024	9035.0024	9035.0024
126	6005 LLUA, 25/47 x 12	9038.0005	9038.0005	9038.0005
127	M22 x 35	9405.3019.4	9405.3019.4	9405.3019.4
128	ø20/10 x 25	9034.1010	9034.1010	9034.1010
129	ø18 x 44.5	9405.3040.4	9405.3040.4	9405.3040.4
130	M6 x 6	9030.2011	9030.2011	9030.2011
131	ø6 x 40	9031.5857	9031.5857	9031.5857
132	ø47 x 357.5, -N/-NF	9408.3036.3	9408.3036.3	9408.3036.3
	ø47 x 357.5, -SF	9408.3037.3	9408.3037.3	9408.3037.3
133	ø48/37.5 x 1	9405.3043.4	9405.3043.4	9405.3043.4
134	ø49/39 x 5	9221.3177.4	9221.3177.4	9221.3177.4
135	6206 2RS, 30/62 x 16	0038.1149	0038.1149	0038.1149
136	A 30 x 1.5	0031.1018	0031.1018	0031.1018
150	1600/4; 2000/3; 2500/3 KS	9405.3044.1	9405.3044.1	9405.3044.1
	1600/10; 2000/8; 2500/8	9405.3045.1	9405.3045.1	9405.3045.1
	1600/30; 2000/25; 2500/25	9405.3046.1	9405.3046.1	9405.3046.1
151	ø8 x 166	9225.3030.4	9225.3030.4	9225.3030.4
152	Gr. 8	9031.2400	9031.2400	9031.2400
153	75 x 57 x 55	9235.3111.3	9235.3111.3	9235.3111.3
154	M8 x 45	9030.0291	9030.0291	9030.0291

		GCH 1600	GCH 2000	GCH 2500
160	209 x 127.71	9235.3110.3	9235.3110.3	9235.3110.3
161	ø47/30 x 3	9038.1750	9038.1750	9038.1750
162	ø47/30 x 2	9038.0252	9038.0252	9038.0252
163	ø47/30 x 1	0038.3128	0038.3128	0038.3128
164	ø47 x 23.7	9235.3107.4	9235.3107.4	9235.3107.4
165	66 x 44 x 34	9408.3005.3	9408.3005.3	9408.3005.3
166	0.4 t	9220.3470.4		
	0.5 t	9220.3471.4	9220.3471.4	
	0.63 t	9220.3472.4	9220.3472.4	9220.3472.4
	0.8 t	9220.3473.4	9220.3473.4	9220.3473.4
	1 t	9220.3474.4	9220.3474.4	9220.3474.4
	1.25 t	9220.3475.4	9220.3475.4	9220.3475.4
	1.6 t	9220.3476.4	9220.3476.4	9220.3476.4
	2 t	9221.3412.4	9221.3412.4	9221.3412.4
	2.5 t	9230.3226.4	9230.3226.4	9230.3226.4
	3.2 t	9230.3227.4	9230.3227.4	9230.3227.4
	4.0 t		9231.3196.4	9231.3196.4
	5.0 t			9235.3064.4
167	3 x 5	9031.6604	9031.6604	9031.6604
168	s=2.0	9220.3482.4	9220.3482.4	9220.3482.4
170	140 x 96 x 181.5	9235.3104.1	9235.3109.1	9235.3109.1
171	ø88 x 76	9230.3059.4		
	ø90 x 80		9231.3059.4	9231.3059.4
172	80 x 80 x 100	9235.3105.3	9235.3105.3	9235.3105.3
173	ø10 x 40	9235.3108.4	9235.3108.4	9235.3108.4